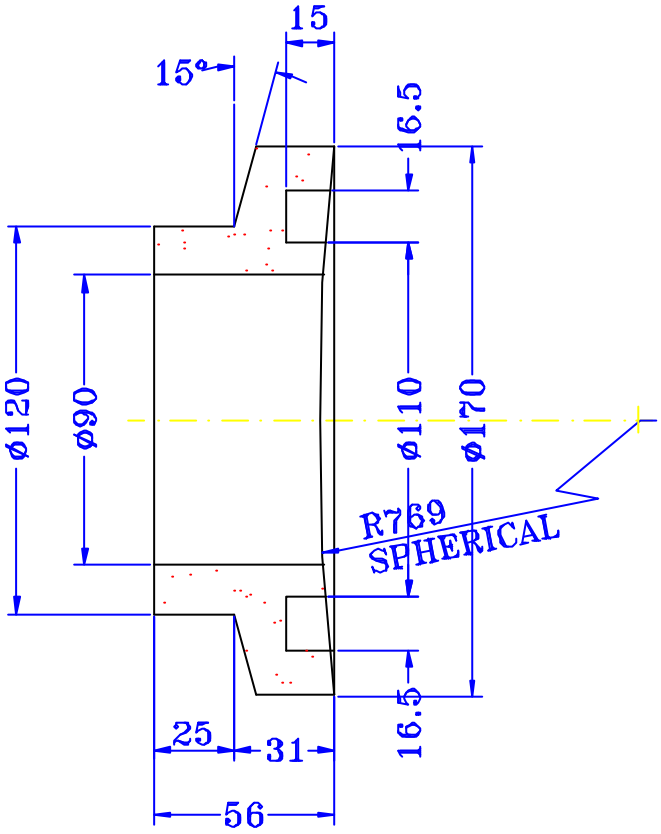

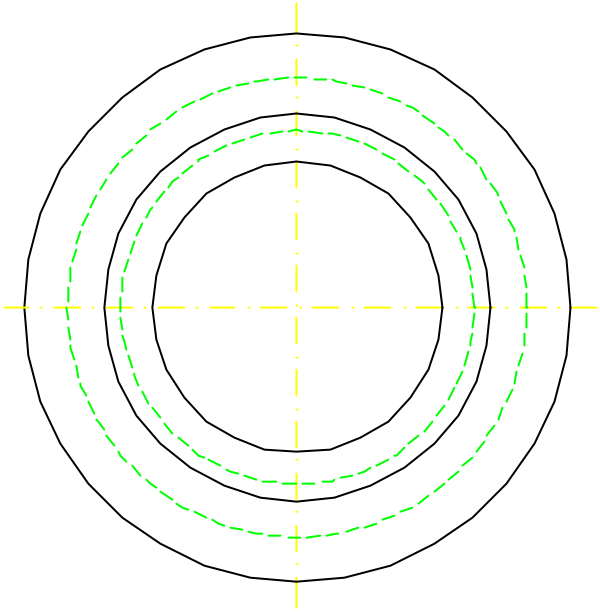

MATERIAL : GRAPHITE
(REF. SPEC SHEET NO : 4C19)

MACHINED ALL OVER

REF. DRG NO. : PM20223-1

ALL DIMENSIONS ARE IN MM
UNLESS OTHERWISE SPECIFIED.

S.NO	DATE	REVISION NOTE	APP.

METROD (OFHC) SDN BHD

DESCRIPTION	RING				
DATE	16.03.95	SCALE	~	DRAWING NO.	REV
DRN.BY	FAZIDAH	APP.BY		4C14	0